THULE SWEDEN

Thule ClipOn High 9105

› Recommendations

THULE BRING IT! GUARANTEE THULE.COM

910501
4DF/12.20160516
501-7297-10

Bring your life
thule.com

EN List of recommendations If you do not find your particular car model in the recommendation list, please see Thule Guide at www.thule.com or contact your dealer.

DE Empfehlungsliste Wenn Sie Ihr eigenes Auto nicht in der empfohlenen Tabelle finden sollten, so schauen Sie bitte in den Thule-Dachträger-Kaufhilfe in www.thule.com oder wenden Sie sich bitte an Ihren Thule-Händler.

FR Liste de modèle de voitures Vérifier la liste des modèles de voitures recommandés, veuillez consulter notre guide d'achat sur www.thule.com ou contacter votre revendeur.

NL Aanbevelingen Indien u uw auto niet in de lijst terugvindt, gelieve de Thule koopgids op www.thule.com of uw Thule-dealer te raadplegen.

IT Lista delle raccomandazioni Se il proprio modello di automobile non è presente nella lista delle raccomandazioni, consultare la Thule Guide all'indirizzo www.thule.com o contattare il proprio rivenditore.

ES Lista de recomendaciones Si no encuentra su automóvil en la lista, vea la guía del comprador en www.thule.com o póngase en contacto con el establecimiento de venta local.

PT Lista de recomendações Caso não encontre seu modelo específico de carro ma lista de recomendação, favor verificar o Guia de Bagageiros de Teto Thule em www.thule.com ou contate seu revendedor.

SV Rekommendationslista Hittar du inte din bil i rekommendationslistan, se köphjälpen på www.thule.com eller kontakta din återförsäljare.

DK Liste med anbefalinger. Der henvises til forhandleren eller Thule Guide på adressen www.thule.com hvis du ikke kan finde netop din bilmodel på listen.

NE Anbefalingsliste Hvis du ikke finner din bestemte bilmodell i anbefalingslisten, kan du se Thule-brosjyren på www.thule.com eller kontakte forhandleren.

FI Suosituslistaa Jos et löydä automalliasi suositustaulukosta, katso Thulen Ostoopas kotisivuillamme www.thule.com tai ota yhteys jälleenmyyjääsi.

ET Soovituste loend Kui Te ei leia oma automudelit soovituste loendist, vaadake Thule katuseraamide juhti aadressil www.thule.com või võtke ühendust müügiagediga

LV Ieteikumu saraksts Ja jūsu automašīnas modelis nav norādīts ietei kumu sarakstā, lūdzu, skatiet Thule r okasgrāmatu vietnē www.thule.com vai sazinieties ar savu izplatītāju.

LT Rekomendacijų sąrašas Jei rekomendacijų sąrae nerandate konkretaus savo automobilio modelio, ˛r. „Thule" vadovą adresu www.thule.com arba kreipkitės į savo atstovą.

PL Lista zalecanych aut Jeśli na liście zalecanych aut nie możesz znaleźć swo jego modelu, zobacz przewodnik Thule Guide na stronie www.thule.com lub skontaktuj się z dealerem.

RU Список рекомендаций Если не удается найти конкретную модель автомобиля в рекомендационном списке, см. руководство Thule на веб-сайте www.thule.com или обратитесь к дилеру.

UK Список рекомендацій Якщо у списку рекомендацій немає вашої моделі автомобіля, дивіться інструкції Thule на веб-сайті www.thule.com або зверніться до вашого дилера.

BG Списък с препоръки Ако не намерите Вашия конкретен модел автомобил в списъка с препоръки, вижте Ръководството на Thule на www.thule.com или се свържете с Вашия дилър.

CS Seznam doporučených vozů Pokud nenaleznete určitý model svého vozidla v seznamu doporučených vozů, podívejte se prosím na průvodce produkty Thule na web www.thule.com nebo se obraťte na svého prodejce.

SK Zoznam odporúčaných vozidiel Ak nenájdete určitý model svojho vozidla v zoznamu odporúčaných vozidiel, pozrite si, prosím, sprievodcu produktmi Thule na webovej stránke www.thule.com alebo sa obráťte na svojho predajcu.

SL Seznam ustreznih modelov in tipov vozil V primeru, da ne najdete svojega vozila, pojdite na spletno stran www.thule.com - Thule Guide ali pa se posvetujte s prodajalcem.

HR/BiH Popis opreme s preporukom Ako u popisu opreme s preporukom prema vrsti automobila ne možete pronaći svoj model automobila, molimo pogledajte Vodič tvrtke Thule na web stranici www.thule.com ili kontaktirajte svog distributera.

RO Lista de recomandări Dacă nu găsiți modelul masinii d-voatra în lista de recomandări, vă rugăm să consultați Ghidul Thule la www.thule.com sau sa contactați distribuitorul.

HU Ajánlások jegyzéke Amennyiben az Ajánlások jegyzékében nem találja az adott gépkocsimodellt, kérjük látogasson el a Thule Guide weblapra a www.thule.com webcímen, vagy lépjen kapcsolatba a helyi értékesítõvel.

EL Λίστα συστάσεων Εάν δεν βρίσκετε το συγκεκριμένο μοντέλο αυτοκινήτου στη λίστα συστάσεων, ανατρέξτε στον Οδηγό της Thule στη διεύθυνση www.thule.com ή επικοινωνήστε με τον κοντινό σας αντιπρόσωπο.

TR Öneri Listesi Aradığınız araç modelini öneri listesinde bulamazsanız, lütfen www.thule.com internet sitesinden Thule Kılavuzuna bakın veya bayiinize danışın.

AR قائمة بالتوصيات إذا لم تعثر على طراز سيارتك في قائمة التوصيات، فيرجى الاطلاع على *Thule Guide* (دليل *Thule*) على الموقع الإلكتروني *www.thule.com*

HE *רשימת המלצות* *אם לא תמצא את דגם המכונית שלך ברשימת המומלצים, עיין ב'מדריך של Thule' בכתובת www.thule.com או צור קשר עם הספק שלך.*

ZH 推奨リスト 推奨リストにご希望の車種が含まれていない場合 は、*www.thule.com* の *Thule* ガイドをご参照いただ くか、お近くの販売店にお問い合わせください。

JA 推奨事項 のリスト推奨リストにお使いの車両モデルが見つからない場合は、スーリーガイド（www.thule.com）でご確認いただくか、販売店にお問い合わせください。

KO 권장 목록 권장 목록에서 특정 차량 모델을 찾을 수 없으면 *www.thule.com* 에서 *Thule* 설명서를 참조하거나가 까운 대리점에 문의하십시오.

TH *รายการคำแนะนำ ถ้าคุณไม่พบรุ่นรถที่ต้องการในรายการคำแนะนำ โปรดอ่านคู่มือของ Thule ได้ที่ www.thule.com หรือติดต่อตัวแทนจำหน่ายของคุณ.*

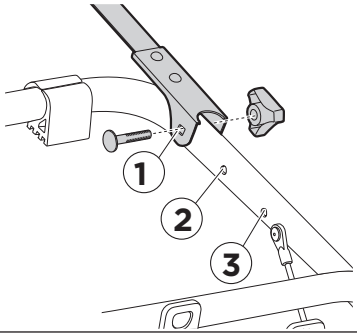

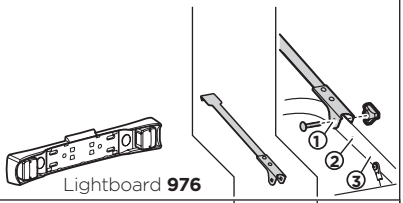

ALFA ROMEO 147, 3/5-dr Hatchback, 01-03	Does not cover the rear lights	-	2
ALFA ROMEO 147, 3/5-dr Hatchback, 04-10	Does not cover the rear lights	-	2
AUDI A3, 3-dr Hatchback, 96-02	Does not cover the rear lights	-	1
AUDI A3, 5-dr Hatchback, 99-03	Does not cover the rear lights	-	1
AUDI A3, 3-dr Hatchback, 03-11	Does not cover the rear lights	-	1
AUDI A3 Sportback, 5-dr Hatchback, 04-12	Does not cover the rear lights	9115	3
AUDI A4 Allroad, 5-dr Estate, 08-15	Does not cover the rear lights	-	1
AUDI A4 Avant, 5-dr Estate, 02-04	Does not cover the rear lights	-	1
AUDI A4 Avant, 5-dr Estate, 05-07	Does not cover the rear lights	-	1
AUDI A4 Avant, 5-dr Estate, 08-15	Does not cover the rear lights	-	1
BMW 1-Series, 3/5-dr Hatchback, 12-	Does not cover the rear lights	9115	3
BMW 3-Series Touring (E36), 5-dr Estate, 96-99	Does not cover the rear lights	-	2
CHEVROLET Kalos, 5-dr Hatchback, 04- 11	Does not cover the rear lights	-	2
CHEVROLET Matiz, 5-dr Hatchback, 00-04	Does not cover the rear lights	-	2
CHEVROLET Matiz, 5-dr Hatchback, 05-09	Does not cover the rear lights	-	2
CHEVROLET Orlando, 5-dr MPV, 11-	Lightboard 976 recommended	-	1
CITROËN C3 (Mk I), 5-dr Hatchback, 02-09	Does not cover the rear lights	-	2
CITROËN Saxo, 3/5-dr Hatchback, 96-03	Does not cover the rear lights	-	1
DACIA Sandero II, 5-dr Hatchback, 13-	Does not cover the rear lights	9115	2
DACIA Sandero StepWay II, 5-dr SUV, 13-	Does not cover the rear lights	9115	2
DAEWOO Matiz, 5-dr Hatchback, 98-00	Does not cover the rear lights	-	2
DAEWOO Matiz, 5-dr Hatchback, 01-05	Does not cover the rear lights	-	2
DAEWOO Nubira, 5-dr Estate, 97-99	Lightboard 976 recommended	-	2
DAIHATSU Charade, 3/5-dr Hatchback, 87-92	Does not cover the rear lights	-	3
DAIHATSU Charade, 3/5-dr Hatchback, 93-00	Does not cover the rear lights	-	1
DAIHATSU Cuore, 3/5-dr Hatchback, 03-06	Lightboard 976 recommended	-	1
DAIHATSU Sirion, 5-dr Hatchback, 06-	Lightboard 976 recommended	-	1
FIAT Bravo, 3-dr Hatchback, 96-02	Does not cover the rear lights	-	2
FIAT EVO, 5-dr Hatchback, 09-12	Lightboard 976 recommended	-	2

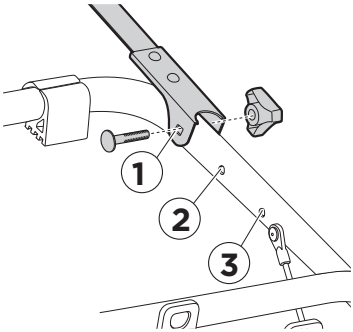

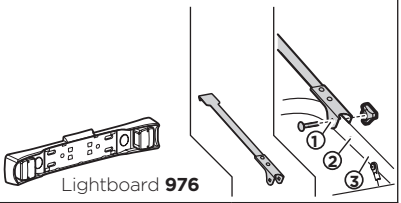

FIAT Grande Punto, 3/5-dr Hatchback, 05-12	Lightboard 976 recommended	-	2
FIAT Panda, 5-dr Hatchback, 12-	Lightboard 976 recommended	-	1
FIAT Panda 4x4, 5-dr Hatchback, 12-	Lightboard 976 recommended	-	1
FIAT Punto (Mk I), 3/5-dr Hatchback, 94-98	Lightboard 976 recommended	-	2
FIAT Punto (Mk II), 3/5-dr Hatchback, 99-02	Lightboard 976 recommended	-	2
FIAT Punto (Mk II), 3/5-dr Hatchback, 03-11	Lightboard 976 recommended	-	2
FIAT Sedeci, 5-dr MPV, 06-	Does not cover the rear lights	-	1
FIAT Uno, 3/5-dr Hatchback, 84-98	Does not cover the rear lights	-	2
FORD Fiesta, 5-dr Hatchback, 02-05	Lightboard 976 recommended	-	2
FORD Fiesta, 3-dr Hatchback, 03-07	Lightboard 976 recommended	-	2
FORD Focus, 3/5-dr Hatchback, 98-04	Lightboard 976 recommended	-	2
FORD Ka, 3-dr Hatchback, 97-08	Does not cover the rear lights	-	1
FORD Scorpio, 5-dr Estate, 85-94	Does not cover the rear lights	-	1
FORD Scorpio, 5-dr Estate, 95-98	Does not cover the rear lights	-	1
FORD Sierra, 5-dr Estate, 84-94	Lightboard 976 recommended	-	2
HONDA Civic, 5-dr Hatchback, 01-03	Does not cover the rear lights	-	1
HONDA Civic, 3/5-dr Hatchback, 04-05	Does not cover the rear lights	-	1
HONDA Fit, 5-dr Hatchback, 08-	Lightboard 976 recommended	-	1
HONDA Jazz, 5-dr Hatchback, 02-08	Lightboard 976 recommended	-	1
HONDA Jazz, 5-dr Hatchback, 09-	Lightboard 976 recommended	-	1
HONDA Logo, 3/5-dr Hatchback, 95-02	Does not cover the rear lights	-	2
HYUNDAI Elantra, 5-dr Estate, 96-99	Does not cover the rear lights	-	1
HYUNDAI Getz, 3/5-dr Hatchback, 02-05	Does not cover the rear lights	-	2
HYUNDAI Getz, 3/5-dr Hatchback, 05-11	Does not cover the rear lights	9115	3
HYUNDAI i10 (PA), 5-dr Hatchback, 09-13	Lightboard 976 recommended	9115	3
KIA Cee´d, 5-dr Hatchback, 07-11	Does not cover the rear lights	9115	3
KIA Cerato, 5-dr Hatchback, 04-09	Does not cover the rear lights	-	1
KIA Picanto, 5-dr Hatchback, 04-10	Does not cover the rear lights	-	2
KIA Pride, 3/5-dr Hatchback, 95-00	Does not cover the rear lights	-	1

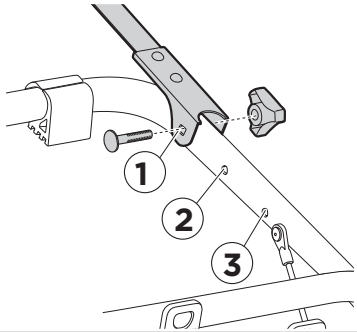

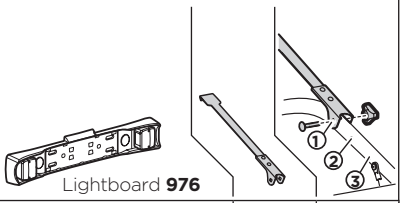

KIA Rio (Mk I), 5-dr Estate, 02-04	Does not cover the rear lights	-	1
KIA Rio (Mk II), 5-dr Hatchback, 05-11	Does not cover the rear lights	-	1
KIA Rio (Mk III), 3/5-dr Hatchback, 12-	Does not cover the rear lights	9115	3
LANCIA Ypsilon, 3-dr Hatchback, 96-02	Does not cover the rear lights	-	2
MAZDA 121, 3/5-dr Hatchback, 95-03	Does not cover the rear lights	-	1
MAZDA 323 F, 5-dr Hatchback, 98-00	Does not cover the rear lights	-	1
MERCEDES C-Class (W202), 5-dr Estate, 93-99	Does not cover the rear lights	-	2
MERCEDES C-Class (W204), 5-dr Estate, 07-14	Does not cover the rear lights	-	1
MITSUBISHI Colt, 3-dr Hatchback, 05-10	Does not cover the rear lights	-	1
NISSAN Almera, 3/5-dr Hatchback, 00-06	Does not cover the rear lights	-	2
NISSAN Micra (K11), 3/5-dr Hatchback, 93-02	Does not cover the rear lights	-	1
NISSAN Note (E11), 5-dr Hatchback, 05-13	Lightboard 976 recommended	-	1
NISSAN Sunny, 3/5-dr Hatchback, 86-90	Does not cover the rear lights	-	1
NISSAN Sunny, 3/5-dr Hatchback, 95-99	Does not cover the rear lights	9111	1
OPEL Astra, 5-dr Hatchback, 04-09	Does not cover the rear lights	9115	3
OPEL Corsa, 3/5-dr Hatchback, 93-00	Does not cover the rear lights	-	2
OPEL Corsa, 3/5-dr Hatchback, 01-03	Lightboard 976 recommended	-	1
OPEL Corsa, 3/5-dr Hatchback, 04-05	Lightboard 976 recommended	-	1
OPEL Corsa (D), 3/5-dr Hatchback, 06-14	Does not cover the rear lights	9115	3
PEUGEOT 106, 3/5-dr Hatchback, 92-04	Does not cover the rear lights	-	2
PEUGEOT 206, 3/5-dr Hatchback, 98-08	Does not cover the rear lights	-	2
PEUGEOT 206+, 3/5-dr Hatchback, 09-12	Does not cover the rear lights	-	2
PEUGEOT 207, 3/5-dr Hatchback, 06-12	Does not cover the rear lights	9115	3
PEUGEOT 307, 3/5-dr Hatchback, 01-04	Does not cover the rear lights	-	2
PEUGEOT 307, 3/5-dr Hatchback, 05-08	Does not cover the rear lights	-	2
PEUGEOT 308, 3/5dr Hatchback, 07-13	Does not cover the rear lights	-	1
PEUGEOT 1007, 3-dr Hatchback, 05-09	Does not cover the rear lights	-	2
PEUGEOT 3008, 5-dr SUV, 09-	Does not cover the rear lights	9115	3
RENAULT Clio III, 3/5-dr Hatchback, 05-12	Does not cover the rear lights	-	1

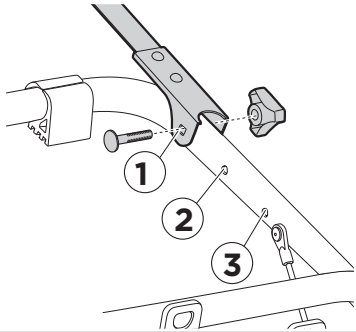

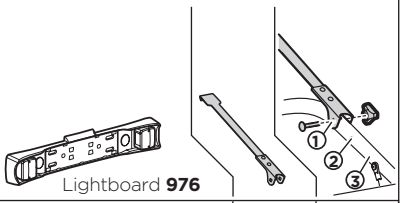

RENAULT Sandero II, 5-dr Hatchback, 13-	Does not cover the rear lights	9115	2
RENAULT Sandero StepWay II, 5-dr SUV, 13-	Does not cover the rear lights	9115	2
RENAULT Twingo, 3-dr Hatchback, 93-02	Does not cover the rear lights	-	2
RENAULT Twingo, 3-dr Hatchback, 03-07	Does not cover the rear lights	-	2
RENAULT Twingo II, 3-dr Hatchback, 07-11	Does not cover the rear lights	-	2
RENAULT Twingo II, 3-dr Hatchback, 12-14	Does not cover the rear lights	-	2
SEAT Arosa, 3-dr Hatchback, 98-00	Does not cover the rear lights	-	3
SEAT Arosa, 3-dr Hatchback, 01-05	Does not cover the rear lights	-	3
SEAT Exeo, 5-dr Estate, 09-13	Does not cover the rear lights	-	1
SEAT Ibiza, 3/5-dr Hatchback, 93-99	Does not cover the rear lights	-	2
SEAT Leon II, 5-dr Hatchback, 05-12	Does not cover the rear lights	9115	3
SKODA Fabia (Mk I), 5-dr Hatchback, 00-07	Does not cover the rear lights	-	1
SKODA Octavia, 5-dr Estate, 98-00	Does not cover the rear lights	-	1
SKODA Octavia, 5-dr Estate, 01-04	Does not cover the rear lights	-	1
SKODA Octavia (Mk III), 5-dr Estate, 13-	Does not cover the rear lights	9115	1
SKODA Octavia Scout (Mk III), 5-dr Estate, 14-	Does not cover the rear lights	9115	1
SUBARU Impreza, 5-dr Hatchback, 12-	Does not cover the rear lights	-	1
SUBARU XV, 5-dr SUV, 12-	Does not cover the rear lights	-	1
SUZUKI Alto, 3/5-dr Hatchback, 94-01	Does not cover the rear lights	-	2
SUZUKI Baleno, 5-dr Estate, 95-98	Does not cover the rear lights	-	2
SUZUKI Baleno, 5-dr Estate, 99-02	Does not cover the rear lights	-	2
SUZUKI Ignis, 3/5-dr Hatchback, 00-03	Lightboard 976 recommended	-	2
SUZUKI Swift, 3/5-dr Hatchback, 05-09	Does not cover the rear lights	-	2
SUZUKI SX4, 5-dr Hatchback, 06-	Does not cover the rear lights	-	1
TOYOTA Auris, 5-dr Hatchback, 13-	Lightboard 976 recommended	-	1
TOYOTA Corolla, 3/5-dr Hatchback, 02-04	Does not cover the rear lights	-	1
TOYOTA Yaris (Mk I), 3/5-dr Hatchback, 04-05	Does not cover the rear lights	-	2
TOYOTA Yaris (Mk II), 3/5-dr Hatchback, 05-11	Does not cover the rear lights	-	1
TOYOTA Yaris (Mk III), 3/5-dr Hatchback, 12-	Does not cover the rear lights	-	1

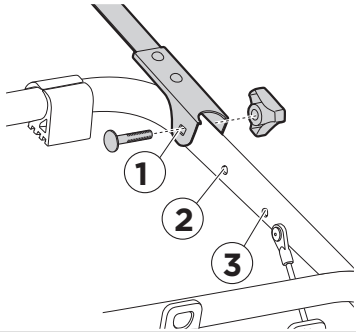

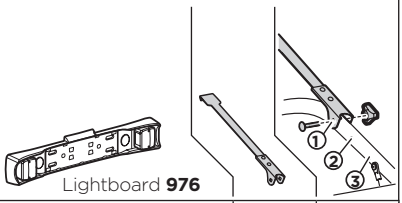

VAUXHALL Astra, 5-dr Hatchback, 04-09	Does not cover the rear lights	9115	3
VAUXHALL Corsa, 3/5-dr Hatchback, 93-00	Does not cover the rear lights	-	2
VAUXHALL Corsa, 3/5-dr Hatchback, 01-03	Lightboard 976 recommended	-	1
VAUXHALL Corsa, 3/5-dr Hatchback, 04-05	Lightboard 976 recommended	-	1
VAUXHALL Corsa (D), 3/5-dr Hatchback, 06-14	Does not cover the rear lights	9115	3
VOLKSWAGEN Cross Polo, 5-dr Hatchback, 06-09	Does not cover the rear lights	-	2
VOLKSWAGEN Cross Polo, 5-dr Hatchback, 10-	Does not cover the rear lights	-	1
VOLKSWAGEN Fox, 3-dr Hatchback, 04-14	Does not cover the rear lights	9115	3
VOLKSWAGEN Golf II, 3/5-dr Hatchback, 84-91	Does not cover the rear lights	-	3
VOLKSWAGEN Golf III, 3/5-dr Hatchback, 92-97	Does not cover the rear lights	-	3
VOLKSWAGEN Golf IV, 3/5-dr Hatchback, 98-03	Does not cover the rear lights	-	2
VOLKSWAGEN Golf V, 3/5-dr Hatchback, 04-07	Does not cover the rear lights	9115	3
VOLKSWAGEN Golf VI, 3/5-dr Hatchback, 08-12	Does not cover the rear lights	9115	3
VOLKSWAGEN Golf VII, 3/5-dr Hatchback, 13-	Does not cover the rear lights	9115	3
VOLKSWAGEN Golf VII Alltrack, 5-dr Estate, 15-	Does not cover the rear lights	9115	3
VOLKSWAGEN Golf VII SportCombi, 5-dr Estate, 13-	Does not cover the rear lights	9115	3
VOLKSWAGEN Lupo, 3-dr Hatchback, 97-05	Does not cover the rear lights	-	3
VOLKSWAGEN Passat Variant (B3/B4), 5-dr Estate, 88-96	Does not cover the rear lights	-	1
VOLKSWAGEN Polo (Mk III), 3/5-dr Hatchback, 95-01	Does not cover the rear lights	-	3
VOLKSWAGEN Polo Variant (Mk III), 5-dr Estate, 96-01	Does not cover the rear lights	-	1
VOLKSWAGEN Polo (Mk IV), 3/5-dr Hatchback, 02-04	Does not cover the rear lights	-	2
VOLKSWAGEN Polo (Mk IV), 3/5-dr Hatchback, 05-09	Does not cover the rear lights	-	2
VOLKSWAGEN Polo (Mk V), 3/5-dr Hatchback, 10-14	Does not cover the rear lights	-	1
VOLKSWAGEN Polo (Mk V), 3/5-dr Hatchback, 15-	Does not cover the rear lights	-	1
VOLVO V40, 5-dr Estate, 96-99	Does not cover the rear lights	-	1
VOLVO V40, 5-dr Estate, 00-04	Does not cover the rear lights	-	1
VOLVO V50, 5-dr Estate, 04-12	Lightboard 976 recommended	-	1

Thule Sweden AB, Box 69, 330 33 Hillerstorp, SWEDEN
info@thule.com
www.thule.com

PART OF THULE GROUP
© Thule Group 2016. All rights reserved.

501-7297-10